Power seats without Memory

From November 1997

Deviate relay location and fuseplacements as well as the locations of multiple connectors see section "component locations".

Relay location on the thirteenfold auxiliary relay panel, above relay panel:

Relay panel:

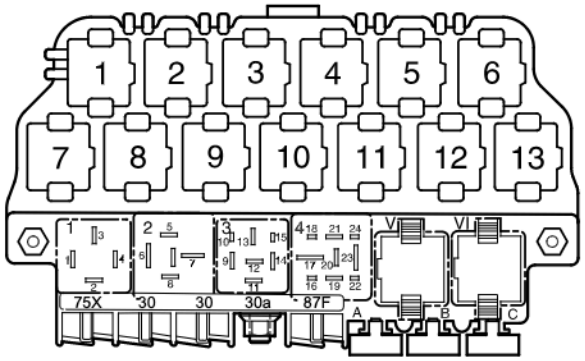

3B–20676

Relay location on the eightfold auxiliary relay panel, behind relay panel:

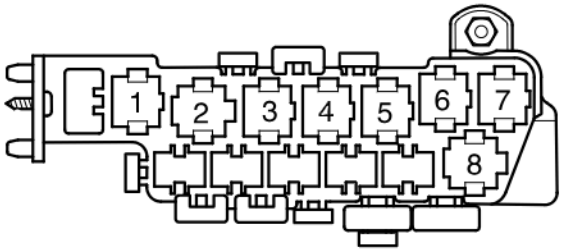

3B–20515

Fuse colors

30 A - green
25 A - white
20 A - yellow
15 A - blue
10 A - red

Protected by copyright. Copying for private or commercial purposes, in part or in whole, is not permitted unless authorised by Volkswagen AG. Volkswagen AG does not guarantee or accept any liability with respect to the correctness of information in this document. Copyright by Volkswagen AG.

7,5 A - brown
5 A - beige

Protected by copyright. Copying for private or commercial purposes, in part or in whole, is not permitted unless authorised by Volkswagen AG. Volkswagen AG does not guarantee or accept any liability with respect to the correctness of information in this document. Copyright by Volkswagen AG.

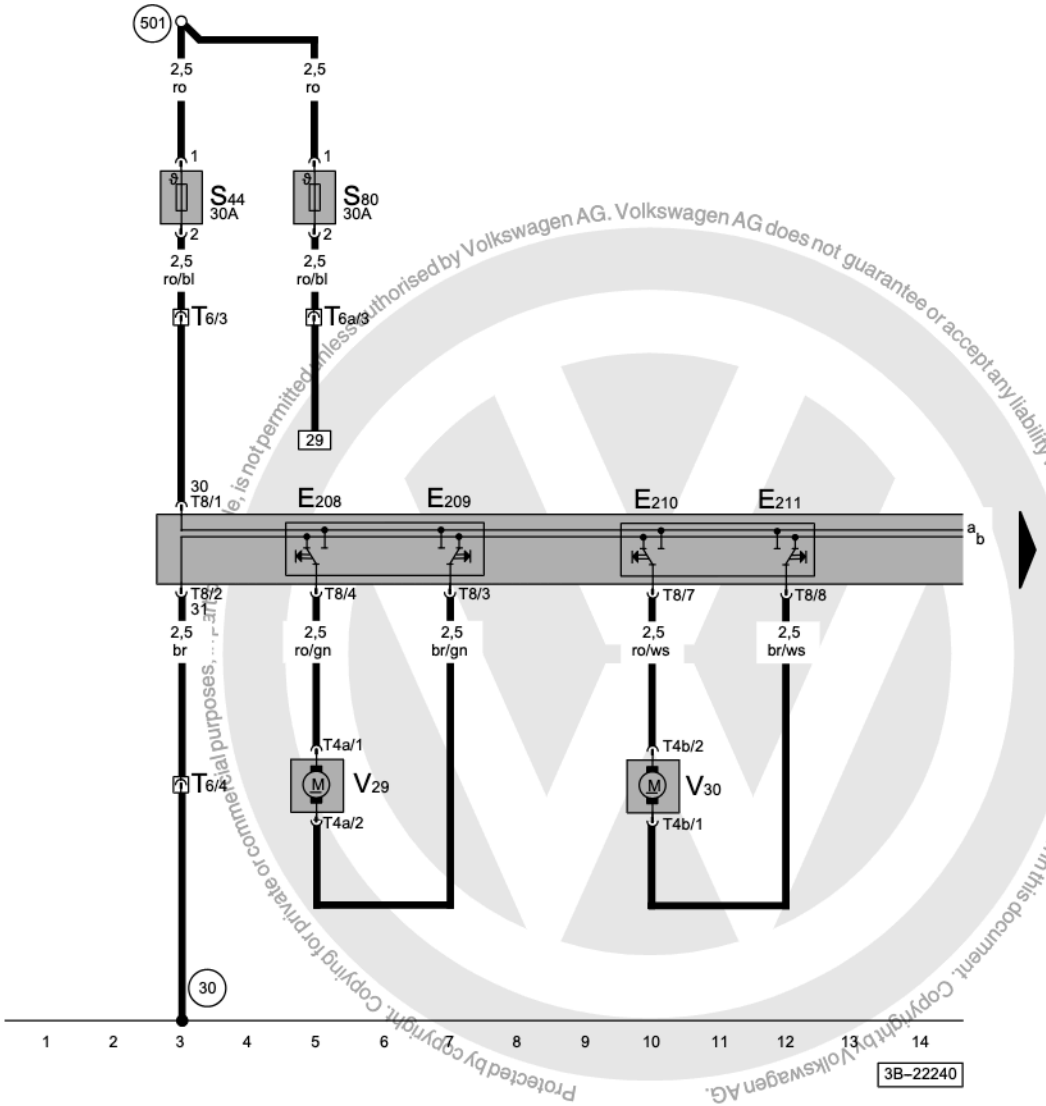

Front height adjustment, driver seat, rear height adjustment, driver seat

E208	Button for front height adjustment, upwards, driver seat
E209	Button for front height adjustment, downwards, driver seat
E210	Button for rear height adjustment, upwards, driver seat
E211	Button for rear height adjustment, downwards, driver seat
S44	Power Seat Circuit Breaker (driver's)
S80	Power Seat Circuit Breaker (passenger's)
T4a	4-Pin Connector, black, below driver's seat
T4b	4-Pin Connector, black, below driver's seat
T6	6-Pin Connector, red, below driver's seat
T6a	6-Pin Connector, red, below driver's seat
T8	8-Pin Connector, black
V29	Driver's Seat Front Height Adjusting Motor
V30	Driver's Seat Rear Height Adjusting Motor
30	Ground connection -1-, beside fuse/relay panel
501	Threaded connection -2-, on the relay plate

ws	=	white
sw	=	black
ro	=	red
br	=	brown
gn	=	green
bl	=	blue
gr	=	grey
li	=	lilac
ge	=	yellow
or	=	orange
rs	=	pink

Protected by copyright. Copying for private or commercial purposes, in part or in whole, is not permitted unless authorised by Volkswagen AG. Volkswagen AG does not guarantee or accept any liability with respect to the correctness of information in this document. Copyright by Volkswagen AG.

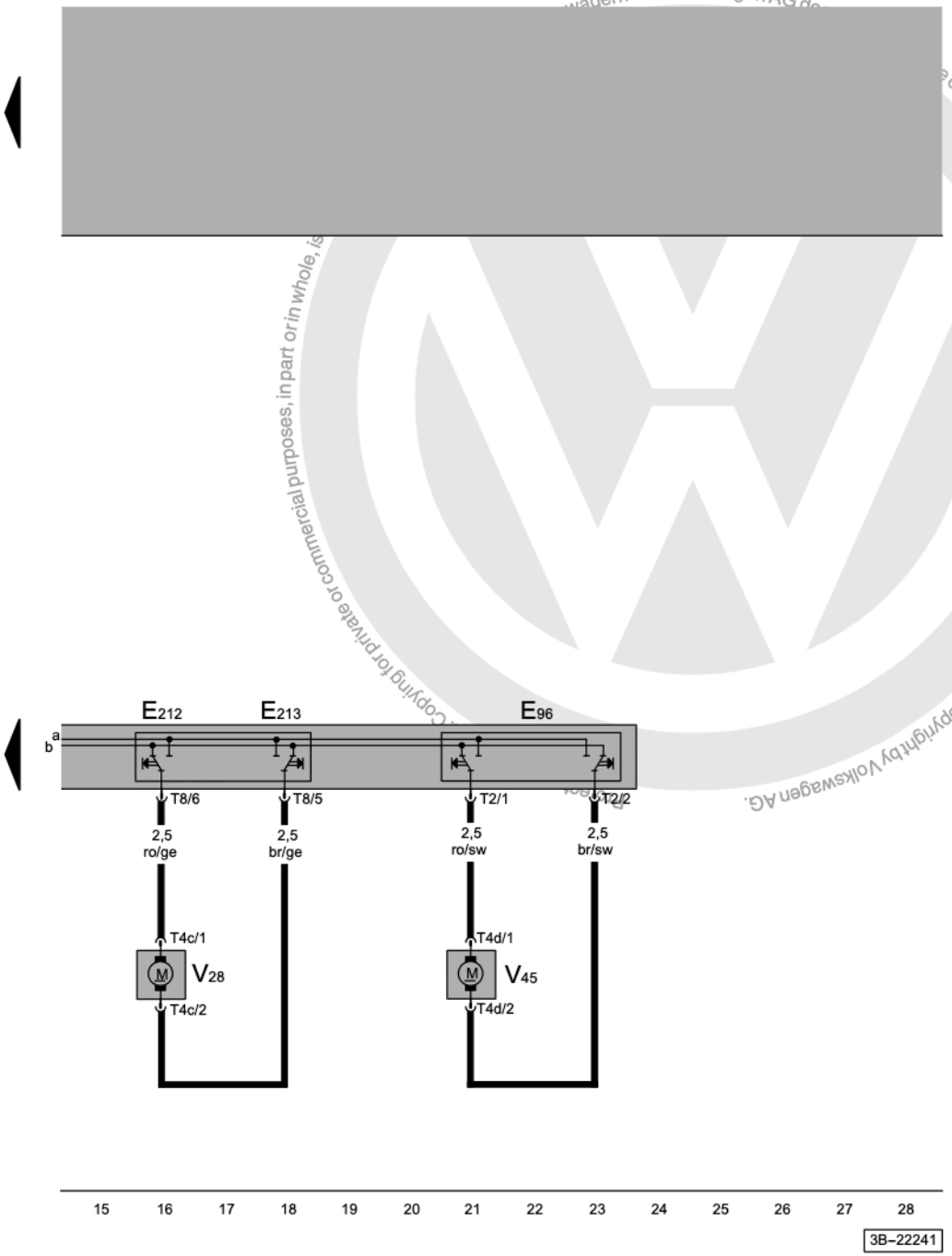

Length adjustment, driver seat, backrest adjustment, driver seat

E96	Driver's Backrest Adjustment Switch
E212	Button for length adjustment, forward, driver seat
E213	Button for length adjustment, backward, driver seat
T2	Double Connector, black
T4c	4-Pin Connector, black, below driver's seat
T4d	4-Pin Connector, black, below driver's seat
T8	8-Pin Connector, black
V28	Driver's Seat Fore/Aft Adjusting Motor
V45	Driver's Backrest Adjusting Motor

ws	=	white
sw	=	black
ro	=	red
br	=	brown
gn	=	green
bl	=	blue
gr	=	grey
li	=	lilac
ge	=	yellow
or	=	orange
rs	=	pink

Copyright by Volkswagen AG. Volkswagen AG, Copying for private or commercial purposes, in part or in whole, is not permitted or accepted any liability with respect to the correctness of information in this document.

Seat adjustement, passenger's seat

E64	Passenger's Seat Fore/Aft Adjusting Switch
E65	Passenger's Seat Front Height Adjusting Switch
E66	Passenger's Seat Rear Height Adjusting Switch
E98	Passenger's Backrest Adjustment Switch
T2a	Double Connector, black
T4e	4-Pin Connector, black, below driver's seat
T4f	4-Pin Connector, black, below driver's seat
T4g	4-Pin Connector, black, below driver's seat
T4h	4-Pin Connector, black, below driver's seat
T6a	6-Pin Connector, red, below driver's seat
T8a	8-Pin Connector, black
V31	Passenger's Seat Fore/Aft Adjusting Motor
V32	Passenger's Seat Front Height Adjusting Motor
V33	Passenger's Seat Rear Height Adjusting Motor
V46	Passenger's Backrest Adjusting Motor
30	Ground connection, -1-, beside fuse/relay panel

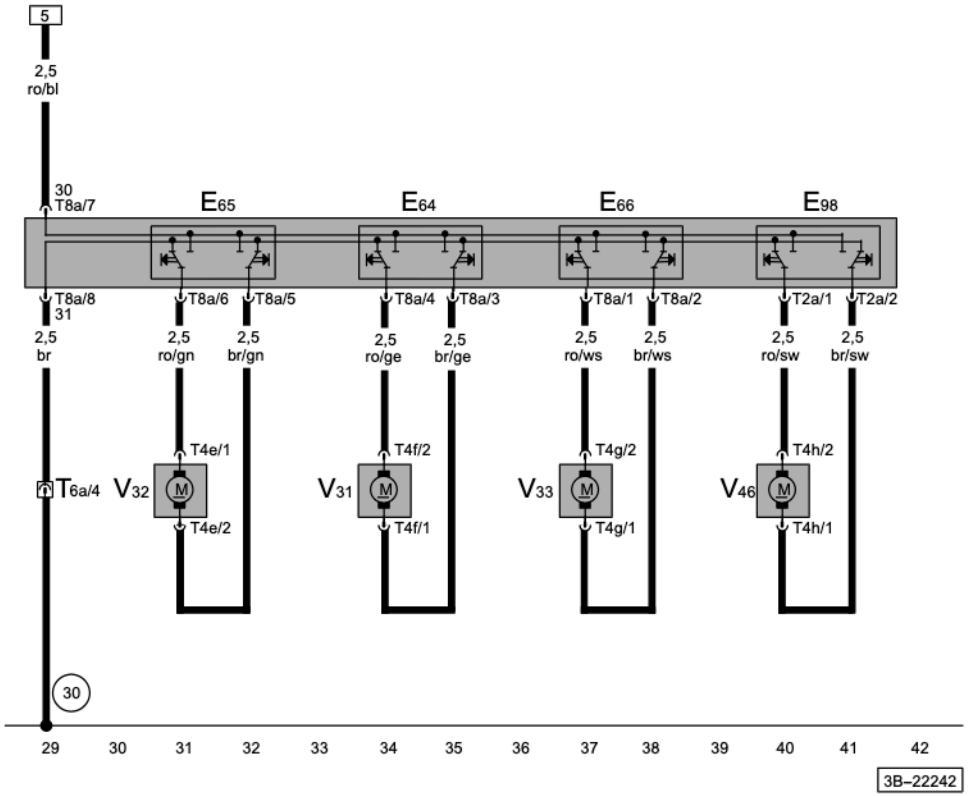

ws	=	white
sw	=	black
ro	=	red
br	=	brown
gn	=	green
bl	=	blue
gr	=	grey
li	=	lilac
ge	=	yellow
or	=	orange
rs	=	pink

Protected by copyright. Copying for private or commercial purposes, in part or in whole, is not permitted unless authorised by Volkswagen AG. Volkswagen AG does not guarantee or accept any liability with respect to the correctness of information in this document. Copyright by Volkswagen AG.